Range Hood

DELUXE 4000-250ES2

ATTRACTIVE LOW-PROFILE, SLIM DESIGN WITH A ROUNDED FRONT AND MITERED CORNERS TO COMPLIMENT TODAY'S STYLISH AND MODERN KITCHENS. RANGE HOOD DELUXE 4000-250ES2 CAPTURES AIR-BORNE GREASE AND OIL AND TRAPS THESE UNWANTED CONTAMINANTS IN THE EXTRA LARGE WASHABLE ALUMINUM MESH. REMOVES ALL POLLUTION SUCH AS STEAM, SMOKE AND ODORS BY USING POWERFUL BUT QUIET MOTORS.
YOU DECIDE THE NOISE LEVEL AND THE EXHAUST CAPACITY YOU NEED FOR YOUR CHANGING COOKING REQUIREMENTS BY USING THE INFINITE SPEED CONTROLS.

MAY 2010

REVERSOMATIC
MANUFACTURING LIMITED

790 Rowntree Dairy Road, Woodbridge, ON. Canada L4L 5V3
Tel: 905-851-6701 • Fax: 905-851-8376 • info@reversomatic.com
www.reversomatic.com

Range Hood

DELUXE 4000-250ES2

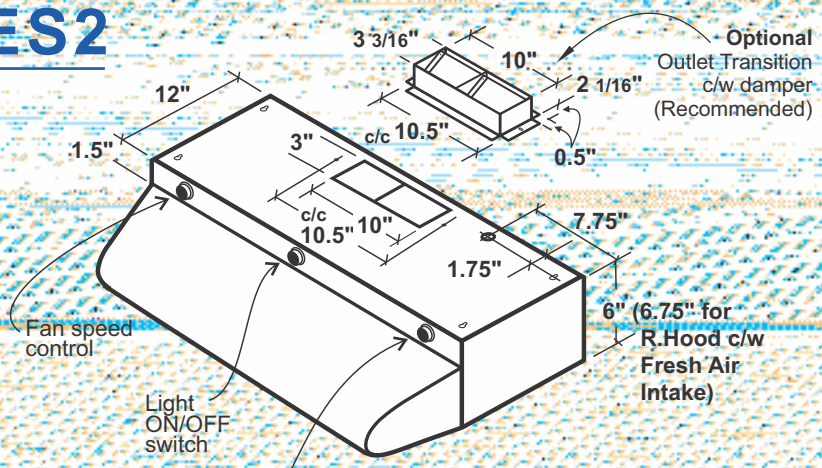

Our powerful, high performance range hood with centrifugal blower wheel is capable of exhausting smoke and odour under most duct design conditions.

It offers an unique streamlined design that will maintain its elegance in any kitchen. Two state speed control gives you an infinite range of settings.

Permanent aluminum-mesh grease filter and light lens clamp in and out for easy cleaning and easy installation. It has a pre-wired junction box with plug in motors, also convenient top or back wiring entrance and keyhole mounting slots.

Available in sizes 30" and 36". Finish: baked on enamel in your choice of colours.

Model 4000-250ES2 is also available with Fresh Air Intake for better ventilation.

We recommend to use a fluorescent 4 pin 18 watt bulb on this unit (such as Panasonic FDS18E35/4 or equivalent). Bulb not supplied.

NOTE:
RH4000-250ES2 c/w fresh air intake is available only for vertical discharge.

To get maximum exhaust turn "ON" both fans.

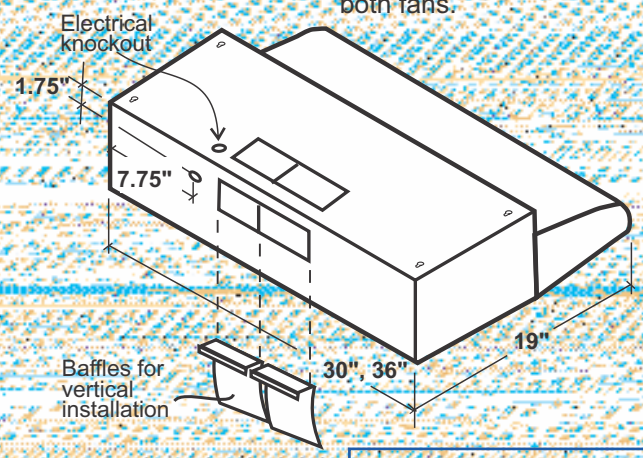

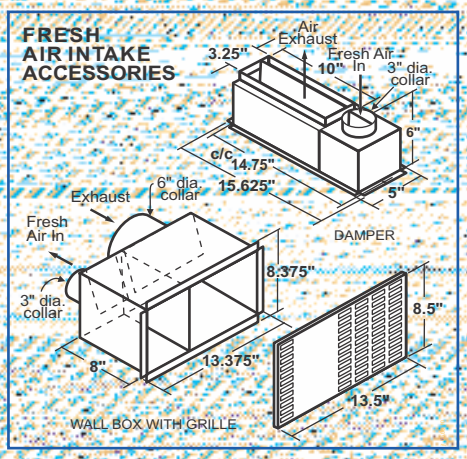

HVI certified ratings

Horizontal Discharge
High Speed: 230 CFM @ 0.10" S.P., 3.0 Sones
Working Speed: 100 CFM, 1.5 Sones (Operating Speed)

Vertical Discharge
High Speed: 210 CFM @ 0.10" S.P. 3.5 Sones
Working Speed: 120 CFM, 2.0 Sones (Operating Speed)

MODEL	MOTOR 120 VAC 60 Hz			CUBIC FEET PER MINUTE											SONES at operating speed
	RPM	AMPS	WATTS	DISCHARGE	S.P.	0.0	0.05	0.10	0.15	0.20	0.25	0.30	0.40	0.50	
4000-250ES2	1100	0.33 x 2	75	Horizontal	CFM	264	248	239	225	208	191	163	139	103	1.5
				Vertical	CFM	236	223	214	200	185	170	149	108	75	2.0

RPM (Revolutions per minute) shown is nominal and performance is based on actual speed of test. Unit was tested with filter and outlet duct. Amps & Watts shown above does not include bulb Amps & Watts.

REVERSOMATIC
MANUFACTURING LIMITED
790 Rowntree Dairy Road, Woodbridge, ON. Canada L4L 5V3
Tel: 905-851-6701 • Fax: 905-851-8376 • info@reversomatic.com
www.reversomatic.com