REVERSOMATIC
MANUFACTURING LIMITED

QCF-130ES

June 2010

SUPER QUIET EXHAUST FAN

The QCF-130ES fan is designed for high performance and quiet operation. This fan is equipped with specially designed mounting slots that allow for easy installation on concrete ceilings or wooden joists. The QCF-130ES is constructed with corrosion resistant, heavy gauge satin coat steel. This fan is suitable for installation over bath tub or shower stall with GFCI protected branch circuit.

QCF-130ES FAN DATA

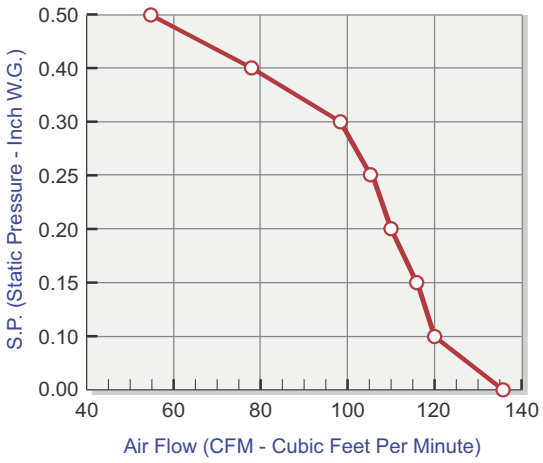

White High Impact Styrene Grille

Off White Aluminum Grille

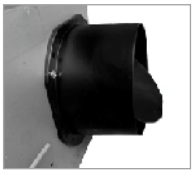

Plastic Backdraft Damper

ACCESSORIES

Standard

- Insulated housing
- Metal collar with neoprene damper
- Mounting brackets
- Aluminum or White High Impact Styrene Grille

Optional:

- Variable speed control
- Aluminum backdraft damper
- Plastic backdraft damper
- Grille with Motion Sensor

C SA US

2100 HVI CERTIFIED

Reversomatic Manufacturing Ltd.
790 Rowntree Dairy Road, Woodbridge, ON Canada L4L 5V3 • Tel: 905-851-6701 • Fax: 905-851-8376
www.reversomatic.com • info@reversomatic.com

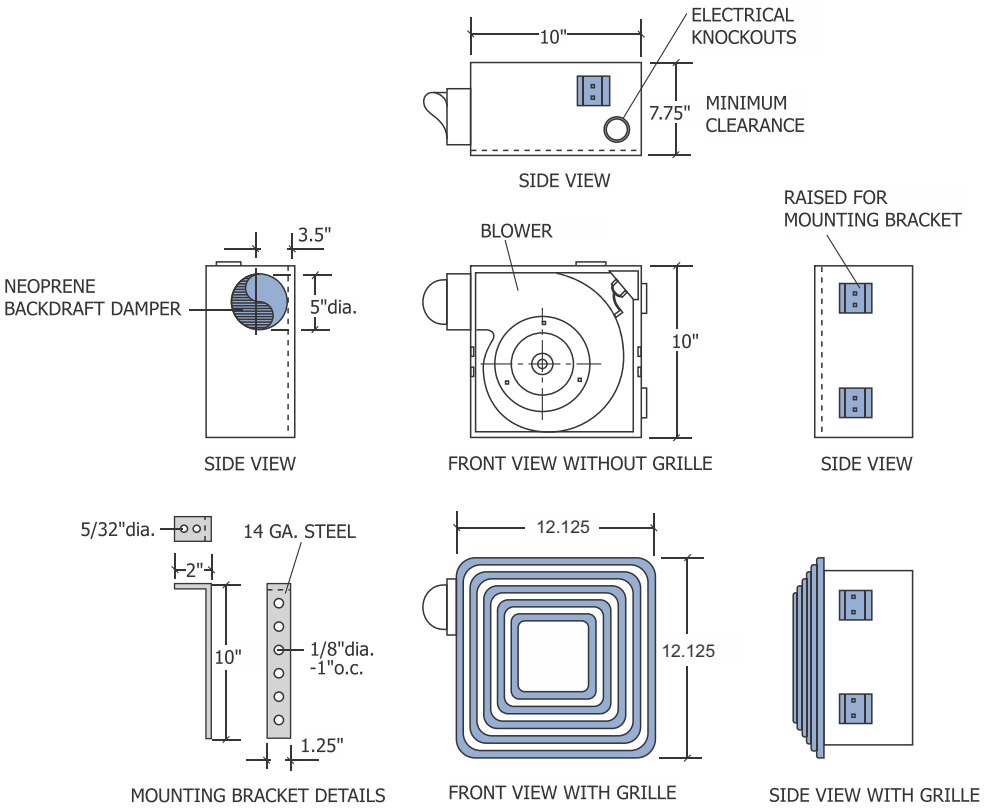

HVI CERTIFIED RATINGS

MODEL	SONES	CFM @ 0.10" S.P.
QCF-130ES	1.3	120

FAN DATA

MODEL	MOTOR 120 VAC 60 Hz			CUBIC FEET PER MINUTE									
	RPM	AMPS	WATTS	S.P.	0.00	0.05	0.10	0.15	0.20	0.25	0.30	0.40	0.50
QCF-130ES	1010	0.31	36	CFM	136	128	120	116	110	105	98	79	55

RPM (Revolution Per Minute) shown is nominal and performance is based on actual speed of test.
Unit was tested with inlet grille, backdraft damper and outlet duct.

Contractor:		QCF-130ES		
Architect:	Job:	Date	Supersedes	Drawing No.
Engineer:	Date Submitted:			

Reversomatic Manufacturing Ltd.
790 Rowntree Dairy Road, Woodbridge, ON Canada L4L 5V3 • Tel: 905-851-6701 • Fax: 905-851-8376
www.reversomatic.com • info@reversomatic.com